SH V46TW

TV Cart

For Most 37"-75" Flat Panel TVs

Ultra-strong structure built to support heavy displays

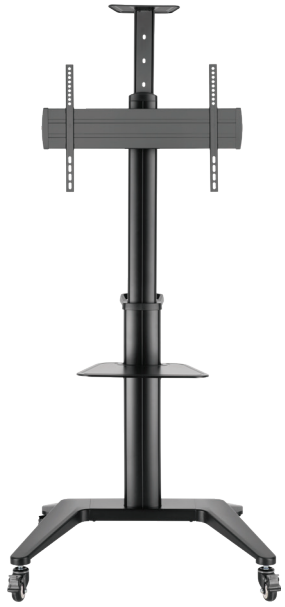

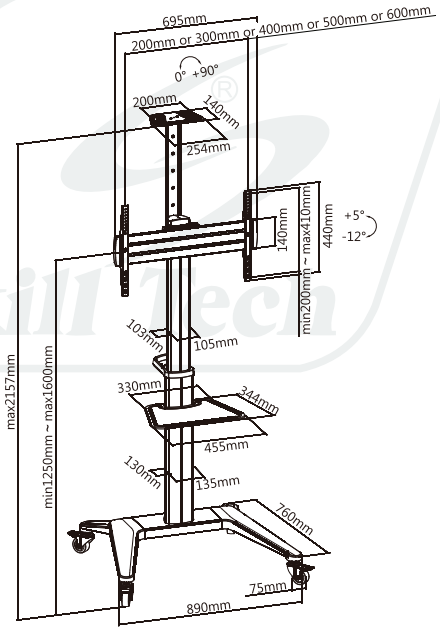

Screen Size
37"-75"

VESA Compatible
Max.600x400

TV RATED
Weight Capacity
70kg/154lbs

Camera RATED
Weight Capacity
5kg/11lbs

Shelf RATED
Weight Capacity
5kg/11lbs

Screen Rotation
0~+90°

Tilt Range
+5° ~ -12°

Cable Management

Cable Management
keeps everything organized

Height Adjustable Shelf
perfect for AV equipment and materials

4 Locking Casters
smooth rolling or lock in place